Operator's Manual

B96/ B108

THREE POINT HITCH TWO STAGE

SNOW BLOWER

BER-VAC

MODELS STARTING AT SERIAL NO. 808746AND UP

TABLE OF CONTENTS

	PAGE
INTRODUCTION	2
SAFETY RECOMMENDATIONS	3
ASSEMBLY	
PTO Shaft	5
Attaching Arms and A-Frame	5
PTO Shield & Support Chain	6
Tractor Attaching Rear Snowblower	6
Tractor Detaching Rear Snowblower	6
Assembly Chute to Snowblower	6
Manual Chute Rotation Bracket	7
Cable Installation - Manual Rotation	7
Hydraulic Chute Rotation Bracket	8
Cable Installation - Hydraulic Rotation	8
LUBRICATION	9
OPERATION	9
ACCESSORIES	9
TORQUE SPECIFICATION TABLE	10
PARTS	
Snowblower, Chute, Rotation, Hitch	11
Double Auger Conversion Kit	14
Cutting Edge and Skid Shoes	16
Gearbox	17
PTO Drive Shaft	18
WARRANTY	19

INTRODUCTION

TO THE PURCHASER

This new snowblower was carefully designed to give years of dependable service.

This manual has been provided to assist in the safe operation and service of your snowblower.

NOTE: All photographs and illustrations in the manual may not necessarily depict the actual models or equipment, but are intended for reference only and are based on the latest product information available at the time of publication.

Familiarize yourself fully with the safety recommendations and operating procedures before putting the machine to use. Carefully read, understand and follow these recommendations and insist that they be followed by those who work with you.

THIS SAFETY ALERT SYMBOL IDENTIFIES IMPORTANT SAFETY MESSAGES IN THIS MANUAL. WHEN YOU SEE IT, BE ALERT TO THE POSSIBILITY OF PERSONAL INJURY AND CAREFULLY READ THE MESSAGE THAT FOLLOWS.

Record your snowblower serial number and size. Your dealer requires this information to give you prompt, efficient service when ordering parts or attachments. Service with genuine **BER-VAC** parts when replacement parts are required.

Right hand and left hand are determined by sitting in the tractor seat facing forward.

MODEL .....

SERIAL NUMBER .....

DATE PURCHASED .....

CAUTION

PREVENT ACCIDENTS

BE SURE TO OBSERVE SAFETY PRECAUTIONS

SAFETY RECOMMENDATIONS

This safety alert symbol identifies important safety messages. When you see it, be alert to the possibility of personal injury and carefully read the message that follows.

1. Read the Operator's Manual carefully. Be thoroughly familiar with the controls and proper use of the equipment. Know how to stop the unit and disengage the controls quickly.
2. Never allow children to operate equipment. Never allow adults to operate equipment without proper instruction.
3. Keep the area of operation clear of all persons, especially small children, and pets.
4. Clothing worn by the operator should be fairly tight and belted. Loose jackets, skirts, shirts, sleeves, loose scarves and so forth should not be permitted because of the danger of getting into moving parts.

PREPARATION

1. (Before the snow season). Thoroughly inspect the area where the equipment is to be used and remove all door mats, sleds, boards, wires and other foreign objects.
2. Disengage clutch and P.T.O., and shift into neutral before starting engine.
3. Do not operate equipment without wearing adequate winter outer garments.
4. Handle fuel with care as it is highly flammable.
   a) Use approved fuel container.
   b) Never add fuel to a running engine or a hot engine.
   c) Fill fuel tank outdoors with extreme care. Never fill fuel tank indoors.
   d) Replace fuel cap securely and wipe up spilled fuel.
5. Adjust collector housing height to clear gravel or crushed rock surface.
6. Never attempt to make any adjustments while engine is running.
7. Provide adequate blocking before working under the snowblower when in raised position.
8. Hydraulic fluid escaping from a small hole can be almost invisible and can penetrate the skin. Use a piece of cardboard or wood, rather than the hands to search for suspected leaks.

OPERATING

1. Before starting, remove any ice that has accumulated in the auger and fan.
2. Be on the look out for foreign objects that could enter the blower while operating.
3. Make sure that the P.T.O. is in the OFF position before starting engine.
4. Do not put hands or feet near rotating parts. Keep clear of discharge opening at all times.
5. Exercise extreme caution when operating on or crossing a gravel drive, walks, or roads. Stay alert for hidden hazards of traffic. Do not carry passengers.
6. Do not use hands or feet to unplug spout.
7. Use adequate safety warning lights. Check local regulations.

8. After striking a foreign object, stop the engine, thoroughly inspect the snowblower for damage and repair the damage before restarting and operating the snowblower.
9. If the snowblower should start to vibrate abnormally, stop the engine immediately and check for the cause. Vibration is generally a warning of trouble.
10. Stop the engine whenever you leave the operating position, before unclogging the collector/impellor housing or discharge guide, and before making any repairs, adjustments or inspections.
11. Take all possible precautions when leaving the vehicle unattended. Disengage the P.T.O., lower the attachment, shift into neutral, set the parking brake, stop the engine and remove the key.
12. When cleaning, repairing or inspecting, make certain auger/fan and all moving parts have stopped.
13. Do not run engine indoors except when starting engine and transporting snowblower in or out of building. Open outside doors as exhaust fumes are dangerous.
14. Do not clear snow across the face of slopes. Exercise extreme caution when changing direction on slopes. Do not attempt to clear steep slopes.
15. Never operate snowblower without guards, plates and other safety protective devices in place.
16. Never operate snowblower near glass enclosures, automobiles, window wells, drop-offs, etc., without proper adjustment of snow discharge angle.
17. Keep children and pets away.
18. Never operate machine at high transport speeds on a slippery surface.
19. Use care when backing up.
20. Never direct discharge at bystanders or allow anyone in front of unit.
21. Disengage power to auger/fan when transporting or when not in use.
22. Use only approved attachments and accessories (such as wheel weights, counterweights, etc.)
23. Never operate the snowblower without good visibility and lighting.
24. Use of tire chains and wheel weights for better traction and stability is recommended.
25. Prolonged exposure to loud noise can cause impairment or loss of hearing. Wear a suitable hearing protective device such as earmuffs or earplugs to protect against objectionable or uncomfortable loud noises.

ASSEMBLY

GENERAL

The Snowblower is assembled at the factory, however, tractor mounting kit must be assembled.

Open carton and lay out all parts for assembly. Separate bolts and nuts into various sizes.

PTO SHAFT INSTALLATION (Figure 1)

a) Clean paint from gearbox input shaft and inside yokes on PTO.

b) Install key in gearbox shaft.

c) Slide PTO yoke, on shaft, use sliding action on PTO to push yoke in place. DO NOT USE A HAMMER.

d) Align hole in PTO yoke with hole in shaft and install 5/16" x 3" bolt, lockwasher and nut.

e) Secure key with 3/8" x ½" Allen set screw.

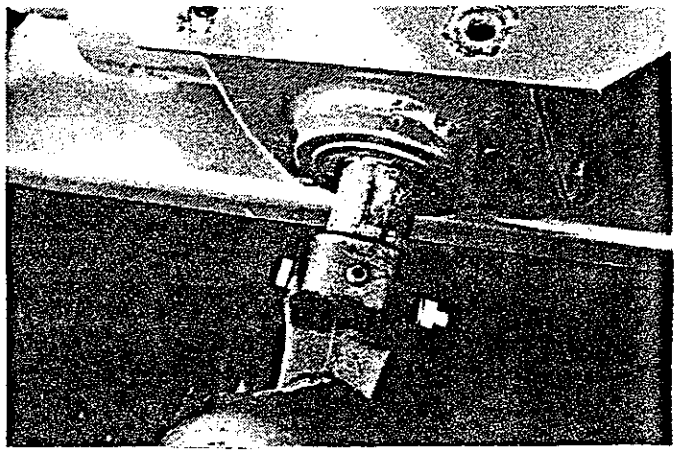

Figure 1

ATTACHING ARMS AND A-FRAME (Figure 2)

NOTE: Leave all bolts loose during assembly and tighten after assembly is completed.

a) Attach lower attaching arms, 1, in square tubes on blower. Use shims, supplied, to ensure arms are a tight fit in blower tubes. There is an upright plate, 2, on each arm. Locate plate on inside.

b) Attaching arms have two holes. Use holes depending on tractor lower link length to provide a minimum of 6" overlap of PTO sliding sections when snowblower is attached.

c) Attach A-frame, 3, to inside of plates, 2, and bolt in place with 3/4" x 2" bolts, lockwashers and nuts.

d) Attach top brace to A-frame using to hole, and bolt in place with 3/4" x 4" bolt, lockwashers and nut.

e) Align rear brace hole, 4, and secure with 3/4" x 1 ½" bolt, lockwasher and nut. Install bolt up through housing with nut on top. If lower hitch tubes are assembled in extended position, brace must also be bolted in extended position.

f) Tighten all bolts with reference to "Torque Chart".

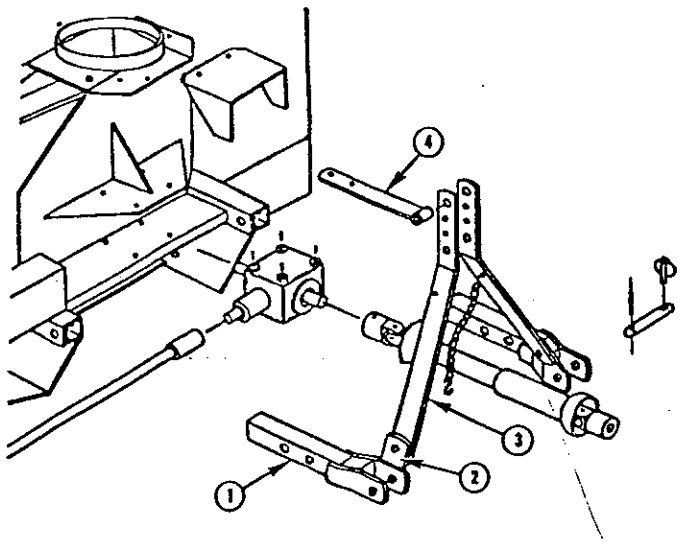

Figure 2

PTO SHIELD & SUPPORT CHAIN (Figure 3)

a) Remove two ½" x 1 bolts from rear of gearbox and install PTO shield, 1, at that location. Replace and retorque bolts.

b) Install "S" hooks, 2, on each end of 12" PTO support chain and bend hooks to prevent removal from chain.

c) Attach "S" hook with chain to one side of A-frame, 3, and bend "S" hook to prevent removal.

d) Chain can now be used to support PTO when snowblower is removed from tractor.

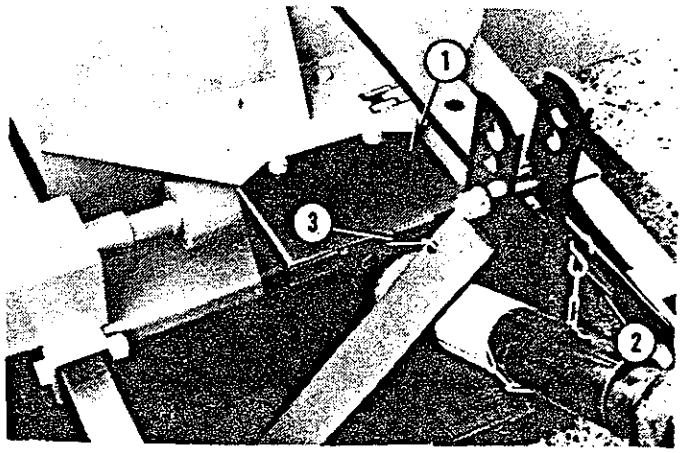

Figure 3

TRACTOR ATTACHING REAR SNOWBLOWER

a) Position tractor in front, keeping lower links level with snowblower lower link pins.

b) Attach left lower link to snowblower and secure with linch pin.

c) Attach right lower link, using levelling crank if necessary to assist attachment. Secure with linch pin.

d) Attach top link using adjustment to assist in attaching and secure pin with linch pin.

e) Level snowblower using levelling crank on right lower lift arm to level side-to-side.

f) Level snowblower front to rear using top link. Install stabilizers or sway blocks to hold the snowblower directly behing tractor during operation.

g) Release PTO storage chain and attach it to one side of A-frame.

h) Attach PTO to tractor making certain spring-loaded pin snaps fully in groove of tractor PTO shaft.

NOTE: Depending on tractor used, it may be necessary to install front tractor weights to maintain front end stability.

TRACTOR DETACHING REAR SNOWBLOWER

Select a level surface to detach.
Remove PTO shaft and support it with chain.
Detach top link using adjustment as required.
Detach right lower link using adjustable link to assist if necessary.
Detach left lower link.

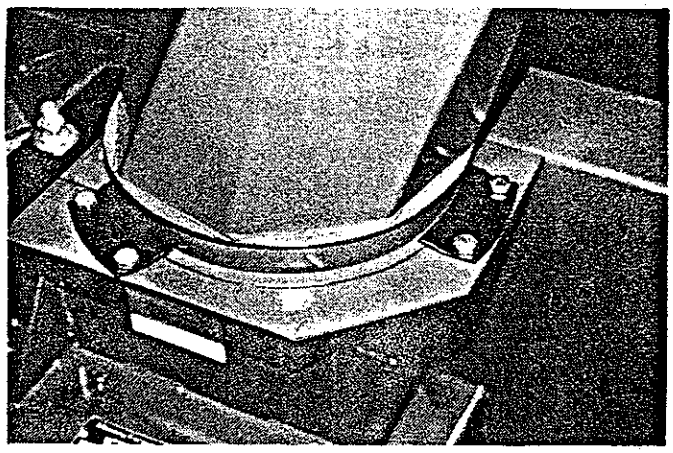

Figure 4

CHUTE & ROTATION

ASSEMBLY CHUTE TO SNOWBLOWER (figure 4)

a) Grease base of chute. Install chute over chute base on snowblower. Install three retainer plates using six ½" x 1" bolts, lockwashers and nuts.

NOTE: Keep plates out away from chute when tightening bolts. If for any reason, one of the plates causes chute to bind, it should be shimmed with small washers.

MANUAL CHUTE ROTATION BRACKET

(Rear Mounted Snowblower) (Figure 5)

a) Install manual rotation bracket to left of chute. Secure with 5/8" x 2 ½" bolt and nylon locknut on left, 1, and ½" x 1 3/4" bolt, 2, with lockwasher and nut on right side.

b) Install one end of rotation system tube over welded pin at, 3, on bracket.

c) Insert crank handle through other end of bracket, 4, and inside tube until first holes in tube and handle are in alignment. Secure with ¼" x 1 ½" bolt and nylon locknut.

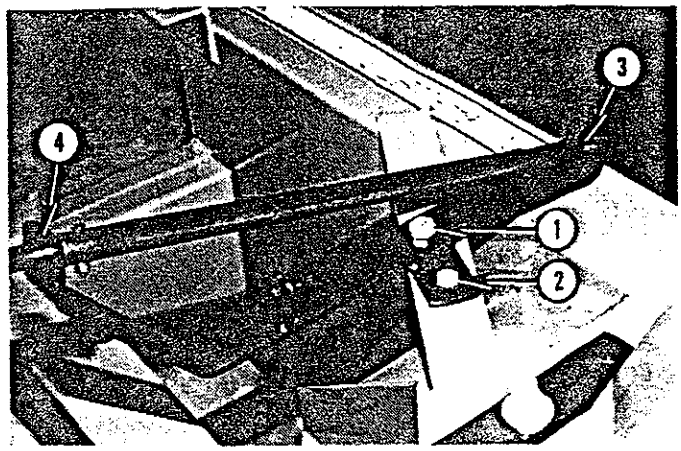

Figure 5

CABLE INSTALLATION - MANUAL CHUTE ROTATION

(Rear Mounted Snowblower) (Figure 6)

a) Place discharge chute with opening to blow directly in front of blower auger.

b) Turn chute opening towards the left (counter-clockwise) approximately 100°. Right and left are determined by facing in direction snowblower will travel when in use.

c) Tape ends of cable with electrical tape to keep ends from fraying.

d) Thread cable through two small holes in base of chute from inside to outside.

e) Tie a single knot in cable leaving 61" of cable on left side.

f) Pass this end of cable around chute clockwise, through pulley on rotation bracket and through upper hole in rotation tube with 5" of cable extending beyond tube. Attach temporarily with cable clamp.

g) Turn rotation handle clockwise holding other end of cable with your free hand so cable remains tight as handle is turned.

h) Continue turning handle until 5-6" of cable extends beyond lower part of rotation tube and lower hole is horizontal.

i) Pass cable through lower hole in rotation tube and attach the two ends of cable together securely using cable clamps.

NOTE: Chute should have equal rotation to each side of center.

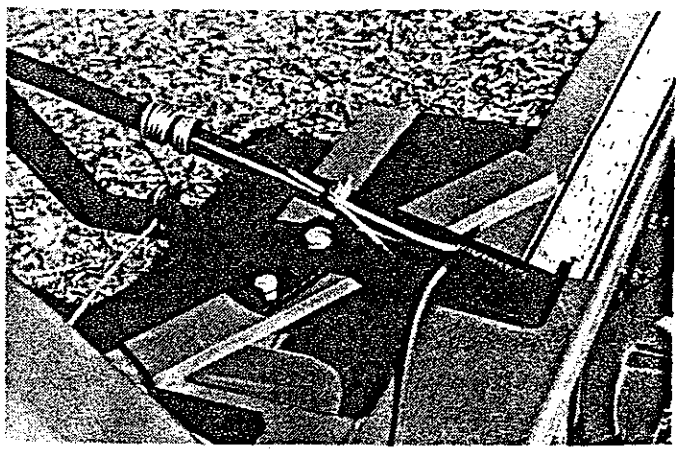

Figure 6

HYDRAULIC CHUTE ROTATION BRACKET

(Standard Chute) (Figure 7)

a) Install hydraulic rotation arm, with pulleys, 1, to left of chute with 11/16" washers above and below arm. Secure with 5/8" x 2 ½" bolt, 2, with locknut, 3. Tighten nut to remove end play but still allow arm to move.

b) Attach 3" x 8" hydraulic cylinder, not supplied.

c) Attach hoses to remote outlets on tractor.

d) Position arm in center of travel.

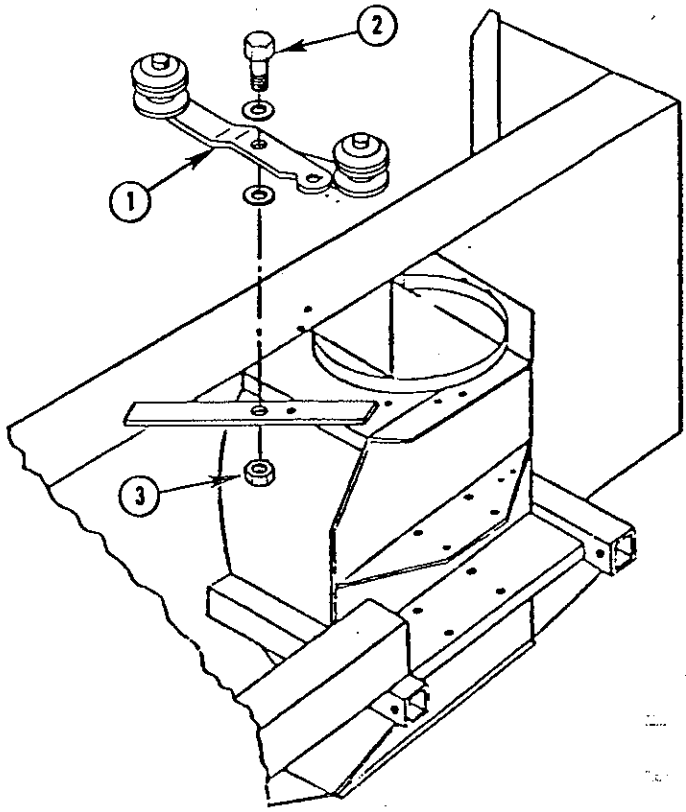

Figure 7

CABLE INSTALLATION – HYDRAULIC CHUTE

(Standard Chute) (Figure 8)

a) Position chute to blow directly in front of blower auger.

b) Pass cable through small holes in base of chute, from inside out.

c) Wrap ends of cable with electrical tape to keep ends from fraying.

d) Wind cables in opposite directions around chute.

e) Pass cables around pulleys, 1, from outside to inside.

f) Insert cable ends through special ½" x 2" bolts, 2, (with hole) and insert ½" x 1" bushings, 3, on bolt and against cable.

g) Install bolts, to replace bolts holding chute retainer plates but do not tighten.

h) With rotation arm in center of travel (parallel to snowblower), and chute positioned to blow directly in front of blower auger. Tighten cables at each bolt and tighten bolts.

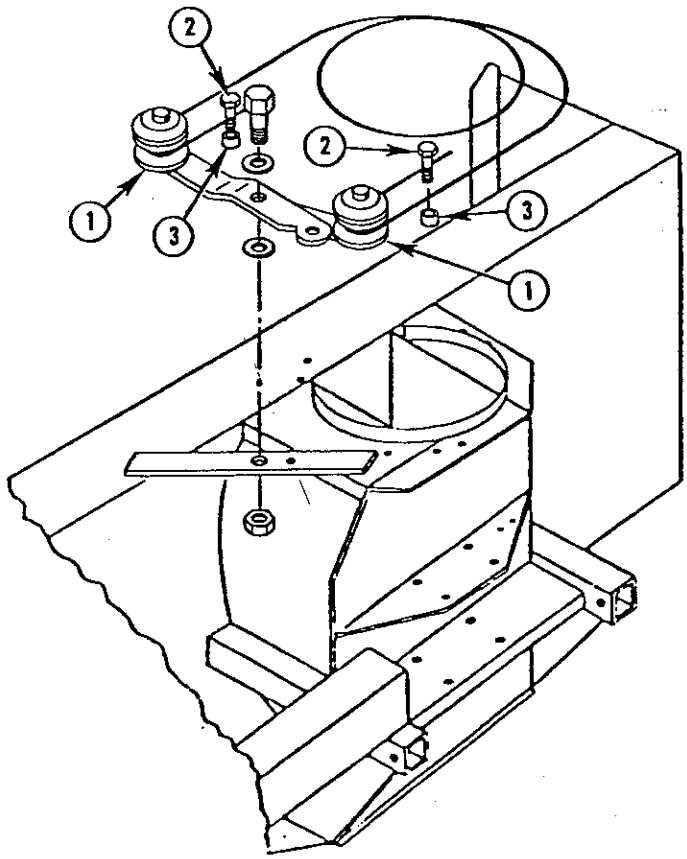

Figure 8

LUBRICATION

Use a good grade gun grease and lubricate as follows:

Description	Time Interval	Lubrication Required
Chute Base	As Required	Lubricate and rotate base until it rotates smoothly.
Crank — Manual Chute Rotation, Fig. 3	As Required	Oil to obtain smooth operation.
Auger Drive Chain	4 Hours	A. Clean conditions. Use chain lubricant after machine use when chain is warm. B. Sandy-muddy conditions. Do not lubricate chain as sand and mud adhers to oiled chain.
Univeral Joints	8 Hours	Lubricate one fitting each U-joint. Slide telescoping sections apart and lubricate sliding sections.
Gearbox	Monthly	Check oil level. Add AGMA 5 EP or 90 extreme pressure oil.
Cross Shaft Shear Plate	Monthlv	Lubricate plate.
PTO Shear Plate	Monthly	Lubricate one grease fitting.

OPERATING THE SNOWBLOWER

1. Check the oil level in the gearbox and if necessary, add A.G.M.A. 5EP extreme pressure oil. (A.G.M.A. is American Gear Manufacturers Association).
2. Check the 2 shear bolts, one on the PTO drive shaft, and one on the auger drive cross shaft between the gearbox and drive chain for proper tightness.
3. Grease each u-joint fitting. Slide PTO drive shaft apart and coat sliding surfaces with grease.
4. Check the drive shaft to be sure it is not obstructed in any way, particularly by the tractor drawbar. Pay special attention when the snowblower is raised and lowered for the first time, that the PTO shaft is not loo long or too short.
5. Check sprocket alignment.
6. Lubricate chute base and adjust rotation cable if necessary.
7. Tire chains and front bumper weights are recommended for better traction and stability.
8. Make sure that the blower is clear of snow before engaging the blower.
9. Make sure that the auger and fan operate freely.
10. Start the tractor engine.
11. Operate the blower at maximum RPM.

ACCESSORIES

- Double Auger Conversion Kits which include auger housing, chain drive and shields.
- Cutting Edge and Skid Shoes.
- 1725 Front Mount Frame
- Industrial Three Part Chute and Truck Loading Chute.

GENERAL TORQUE SPECIFICATION TABLE (Revised 2-74)

USE THE FOLLOWING TORQUES WHEN SPECIAL TORQUES ARE NOT GIVEN

NOTE: These values apply to fasteners as received from supplier, dry, or when lubricated with normal engine oil. They do not apply if special graphited or moly disulphide greases or other extreme pressure lubricants are used. This applies to both UNF and UNC threads.

SEE Grade No.		2				5				8 *			
Bolt head identification marks as per grade NOTE: Manufacturing Marks Will Vary													
		Torque				Torque				Torque			
Bolt Size		Pounds Feet		Newton-Meters		Pounds Feet		Newton-Meters		Pounds Feet		Newton Meters	
Inches	Millimeters	Min.	Max.	Min.	Max.	Min.	Max.	Min.	Max.	Min.	Max.	Min.	Max.
1/4	6,35	5	6	6.8	8.13	9	11	12.2	14.9	12	15	16.3	30.3
5/16	7.94	10	12	13.6	16.3	17	20.5	23.1	27.8	24	29	32.5	39.3
3/8	9.53	20	23	27.1	31.2	35	42	47.5	57.0	45	54	61.0	73.2
7/16	11.11	30	25	40.7	47.4	54	64	73.2	86.8	70	84	94.9	113.9
1/2	12.70	45	52	61.0	70.5	80	96	108.5	130.2	110	132	149.2	179.0
9/16	14.29	65	75	88.1	101.6	110	132	149.2	179.0	160	192	217.0	260.4
5/8	15.88	95	105	128.7	142.3	150	180	203.4	244.1	220	264	298.3	358.0
3/4	19.05	150	185	203.3	250.7	270	324	366.1	439.3	380	456	515.3	618.3
7/8	22.23	160	200	216.8	271.0	400	480	542.4	650.9	600	720	813.6	976.3
1	25.40	250	300	338.8	406.5	580	696	786.5	943.8	900	1080	1220.4	1464.5
1-1/8	25.58	—		—		800	880	1084.8	1193.3	1280	1440	1735.7	1952.6
1-1/4	31.75	—		—		1120	1240	1518.7	1681.4	1820	2000	2467.9	2712.0
1-3/8	34.93	—		—		1460	1680	1979.8	2278.1	2380	2720	3227.3	3688.3
1-1/2	38.10	—		—		1940	2200	2630.6	2983.2	3160	3560	4285.0	4827.4

* Thick nuts must be used with Grade 8 bolts.

METRIC BOLT TORQUE SPECIFICATIONS

ze of screw	Grade No.	Coarse thread			Fine thread		
		Pitch (mm)	Pounds Feet	Newton-Meters	Pitch (mm)	Pounds Feet	Newton-Meters
M6	4T (4)	1.0	3.6–5.8	4.9–7.9	—	—	—
	7T (7)		5.8–9.4	7.9–12.7		—	—
	8T (8) (11)		7.2–10	9.8–13.6		—	—
M8	4T	1.25	7.2–14	9.8–19	1.0	12–17	16.3–23
	7T		17–22	23–29.8		19–27	25.7–36.6
	8T		20–26	27.1–35.2		22–31	29.8–42
M10	4T	1.5	20–25	27.1–33.9	1.25	20–29	27.1–39.3
	7T		34–40	46.1–54.2		35–47	47.4–63.7
	8T		38–46	51.5–62.3		40–52	54.2–70.5
M12	4T	1.75	28–34	37.9–46.1	1.25	31–41	42–55.6
	7T		51–59	69.1–79.9		56–68	75.9–92.1
	8T		57–66	77.2–89.4		62–75	84–101.6
M14	4T	2.0	49–56	66.4–75.9	1.5	52–64	70.5–86.7
	7T		81–93	109.8–126		90–106	122–143.6
	8T		96–109	130.1–147.7		107–124	145–168
M16	4T	2.0	67–77	90.8–104.3	1.5	69–83	93.5–112.5
	7T		116–130	157.2–176.2		120–138	162.6–187
	8T		129–145	174.8–196.5		140–158	189.7–214.1
M18	4T	2.0	88–100	119.2–136	1.5	100–117	136–158.5
	7T		150–168	203.3–227.6		177–199	239.8–269.6
	8T		175–194	237.1–262.9		202–231	273.7–313
M20	4T	2.5	108–130	146.3–176.2	1.5	132–150	178.9–203.3
	7T		186–205	252–277.8		206–242	279.1–327.9
	8T		213–249	288.6–337.4		246–289	333.3–391.6

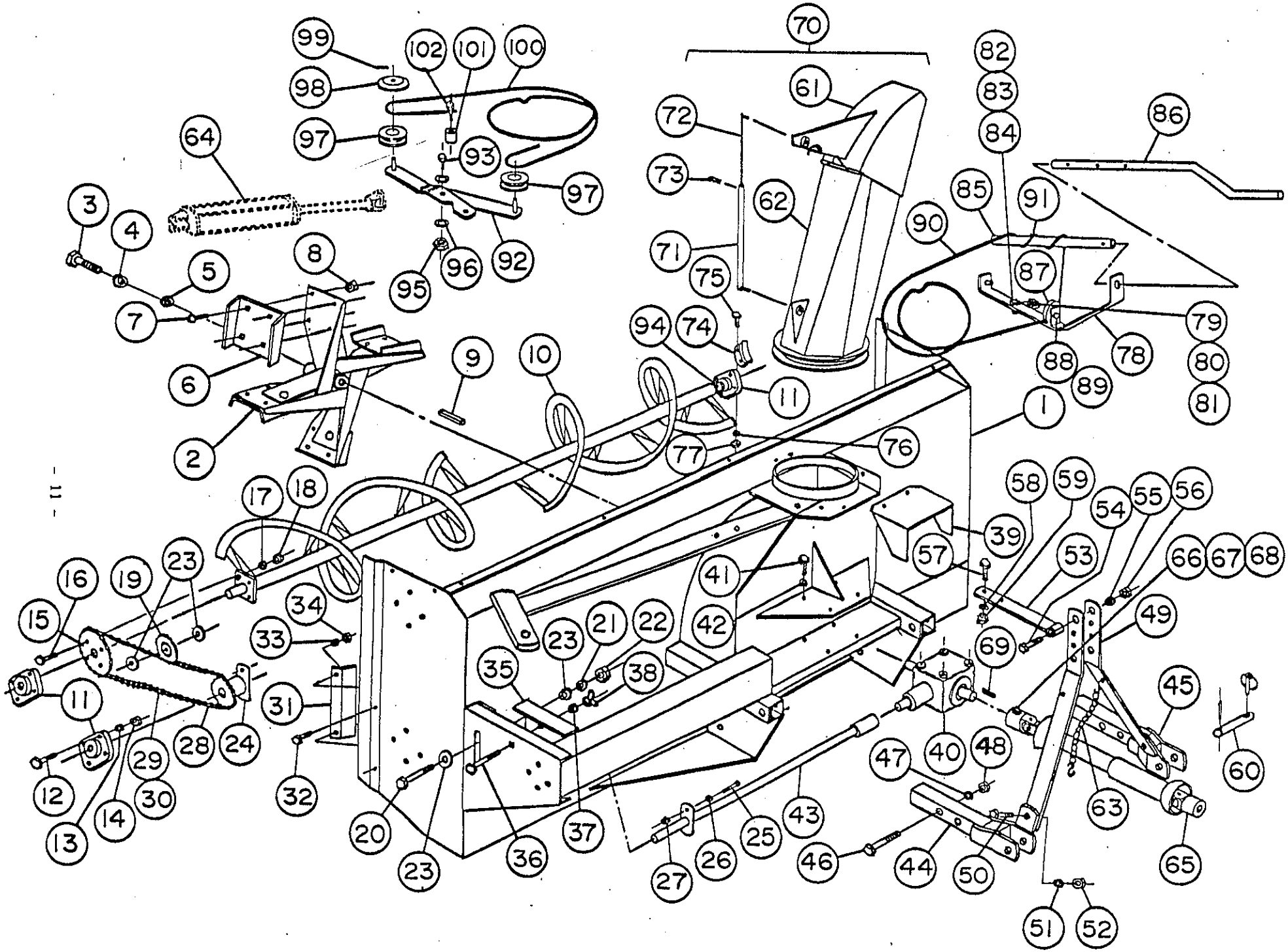
99
102
101
100
70
82
98
61
83
72
84
86
64
97
93
97
73
62
85
91
3
4
90
71
87
5
8
95
96
92
75
79
7
94
74
88
78
80
6
9
10
11
89
81
1
2
77
76
58
59
17
18
54
55
56
39
57
53
66
67
68
16
19
23
41
15
34
42
49
33
21
22
69
23
35
38
45
11
31
28
24
29
47
40
48
60
12
30
32
14
63
13
20
37
43
25
26
36
23
27
46
44
50
65
51
52

REF. NO.	PART NO.	DESCRIPTION	NO. REQ. B96	NO. REQ. B108
1	656259	FRAME	-	1
1	655952	FRAME	1	-
2	655956	FAN	1	1
3		BOLT (5/8" NC X 1 1/2", HEX)	1	1
4		WASHER (5/8", LOCK)	1	1
5		WASHER (11/16" ID, FLAT)	1	1
6	655157	FAN BLADE	4	4
7		BOLT (7/16" NC X 1", CARRIAGE)	16	16
8		NUT (7/16" NC, STOVER LOCK)	16	16
9	656270	KEY (3/8" X 3/8" X 4 3/4")	1	1
10	655977	AUGER ASSEMBLY	1	-
10	655998	AUGER ASSEMBLY	-	1
11	65482	BEARING WITH LOCKING COLLAR	3	3
12		BOLT (1/2" NC X 1 1/2", HEX)	12	12
13		WASHER (1/2", LOCK)	12	12
14		NUT (1/2" NC, HEX)	12	12
15	655958	SPROCKET (80A34)	1	1
16		BOLT (3/8" NC X 1 1/4", HEX)	4	4
17		WASHER (3/8", LOCK)	4	4
18		NUT (3/8" NC, HEX)	4	4
19	654756	IDLER SPROCKET (80A11)	1	1
20		BOLT (3/4" NC X 5", HEX)	1	1
21		WASHER (3/4", LOCK)	1	1
22		NUT (3/4" NC, HEX)	1	1
23		WASHER (13/16" ID, FLAT)	20	20
24	655960	SPROCKET WITH SHEAR PLATE	1	1
25		BOLT (5/16" NC X 2", GRADE 5, HEX)	1	1
26		WASHER (5/16", LOCK)	1	1
27		NUT (5/16" NC, HEX)	1	1
28	655955	CHAIN (#80 X 73 LINKS, w/CONN. LINK & HALF LINK)	1	1
29	655549	CONNECTING LINK ONLY	1	1
30	655550	HALF LINK ONLY	1	1
31	655961	CHAIN GUARD	1	1
32		BOLT (3/8" X 1", HEX)	2	2
33		WASHER (3/8", LOCK)	2	2
34		NUT (3/8" NC, HEX)	2	2
35	656267	CHAIN COVER	1	1
36		BOLT (3/8" NC X 4 1/2", CARRIAGE)	1	1
37		WASHER (3/8", LOCK)	1	1
38		NUT (3/8" NC, WING)	1	1
39	654654	P.T.O. GUARD	1	1
40	655954	GEAR BOX ASSEMBLY	1	1
41		BOLT (1/2" X 1", HEX)	8	8
42		WASHER (1/2" LOCK)	8	8
43	655959	AUGER CROSS SHAFT	1	-
43	656260	AUGER CROSS SHAFT	-	1
44	656096	LOWER HITCH LEFT	1	1
45	656097	LOWER HITCH RIGHT	1	1
46		BOLT (3/4" NC X 4½", Hex)	2	2
47		WASHER (3/4", LOCK)	2	2
48		NUT (3/4" NC, HEX)	2	2
49	656098	HITCH ARM	2	2
50		BOLT (3/4" NC X 2", HEX)	2	2
51		WASHER (3/4", LOCK)	2	2

REF. NO.	PART NO.	DESCRIPTION	NO. REQ. B96	NO. REQ. B108
52		NUT (3/4", HEX)	2	2
53	656095	UPPER HITCH	1	1
54		BOLT (3/4" NC X 4", HEX)	1	1
55		WASHER (3/4", LOCK)	1	1
56		NUT (3/4", NC, HEX)	1	1
57		BOLT (3/4" NC X 2½", Hex)	1	1
58		WASHER (3/4", LOCK)	1	1
59		NUT (3/4" NC, HEX)	1	1
60	656322	PIN (CAT. 2, with Linch Pin)	2	2
61	65472	DEFLECTOR	1	1
62	65473	CHUTE BASE	1	1
63	654890	CHAIN w/2 S-HOOKS	1	1
64		CYLINDER (3" X 8") [OPTION]	(1)	(1)
65	656088	P.T.O. SHAFT (WEASLER SERIES DW 3050-P)	1	1
66		BOLT (5/16" NC X 3 1/2" HEX)	1	1
67		WASHER (5/16", LOCK)	1	1
68		NUT (5/16", HEX)	1	1
69	65402	KEY (3/8" X 3/8" X 2")	1	1
70	65415	CHUTE ASSEMBLY	1	1
71	65474	ADJUSTMENT ROD	1	1
72	65476	ADJUSTMENT PIPE	1	1
73		PIN (S-13, HAIR)	1	1
74	65477	RETAINING PLATE	3	3
75		BOLT (1/2" NC X 1", HEX)	6	6
76		WASHER (1/2", LOCK)	6	6
77		NUT (1/2" NC, HEX)	6	6
78	654186	ROTATION BRACKET	1	1
79		BOLT (1/2" NC X 1 3/4", HEX)	1	1
80		WASHER (1/2", LOCK)	1	1
81		NUT (1/2" NC, HEX)	1	1
82		BOLT (5/8" NC X 2 1/2", HEX)	1	1
83		NUT (5/8" NC, NYLON LOCK)	1	1
84		WASHER (5/8", FLAT)	2	2
85	654187	ROTATION TUBE	1	1
86	654185	HANDLE	1	1
87	654189	BEARING (KILIAN)	1	1
88		BOLT (1/4" NC X 1 1/4", HEX)	1	1
89		NUT (1/4" NC, STOVER LOCK)	1	1
90	654201	CABLE (3/16" X 152")	1	1
91	654202	CABLE CLAMP (3/16" DIA.)	1	1
92	654190	ROTATION ARM	1	1
93		BOLT (5/8" NC X 2 1/2", HEX)	1	1
94	655812	SPACER	1	1
95		NUT (5/8" NC, NYLON LOCK)	1	1
96		WASHER (11/16" ID, FLAT)	2	2
97	654191	PULLEY	2	2
98	654193	PULLEY GUARD	2	2
99		PIN (3/16" X 1", ROLL)	2	2
100	654192	CABLE (3/16" X 133")	1	1
101	654198	TUBE	2	2
102	654199	BOLT (1/2" NC X 2", SPECIAL)	2	2

DOUBLE AUGER CONVERSION KIT

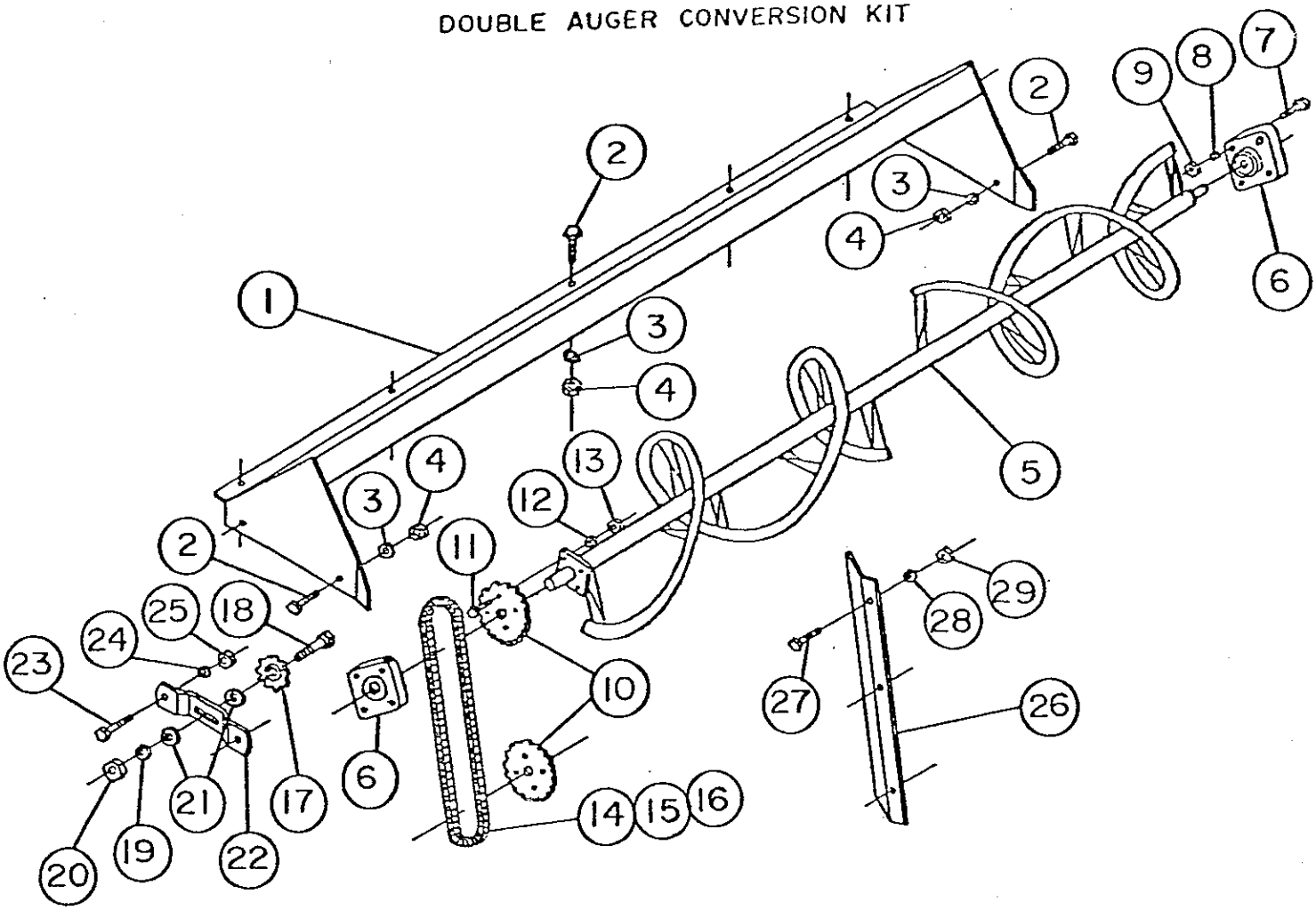

DOUBLE AUGER CONVERSION KIT

ITEM	PART #	DESCRIPTION	QTY	
			B96	B108
1	656274	Snowblower Frame Extension	1	-
	656275	Snowblower Frame Extention	-	1
2	O/L	Bolt (3/8" NC x 1", Hex)	9	9
3	O/L	Washer (3/8", Lock)	9	9
4	O/L	Nut (3/8" NC, Hex)	9	9
5	655997	Auger Assembly	1	-
	655999	Auger Assembly	-	1
6	65482	Bearing	2	2
7	O/L	Bolt ($\frac{1}{2}$" NC x $1\frac{1}{2}$", Hex)	8	8
8	O/L	Washer ($\frac{1}{2}$" Lock)	8	8
9	O/L	Nut ($\frac{1}{2}$" NC, Hex)	8	8
10	654167	Sprocket No. 60 - 32 teeth	2	2
11	O/L	Bolt (3/8" NC x $1\frac{1}{4}$", Hex)	8	8
12	O/L	Washer (3/8", Lock)	8	8
13	O/L	Nut (3/8" NC, Hex)	8	8
14	654788	Auger Drive Chain No. 60 - 81 Link	1	1
15	655366	Connecting Link	1	1
16	655367	Half-Link	1	1
17	65410	Idler Sprocket	1	1
18	O/L	Bolt (5/8" NC x $2\frac{1}{2}$", Hex)	1	1
19	O/L	Washer (5/8", Lock)	1	1
20	O/L	Nut (5/8" NC, Hex)	1	1
21	O/L	Washer (11/16", Flat)	2	2
22	655782	Adjuster	1	1
23	O/L	Bolt (3/8" NC x $1\frac{1}{4}$", Hex)	2	2
24	O/L	Washer (3/8", Lock)	2	2
25	O/L	Nut (3/8" NC, Hex)	2	2
26	656269	Chain Guard	1	1
27	O/L	Bolt (3/8" NC x 1", Hex)	3	3
28	O/L	Washer (3/8", Lock)	3	3
29	O/L	Nut (3/8" NC, Hex)	3	3

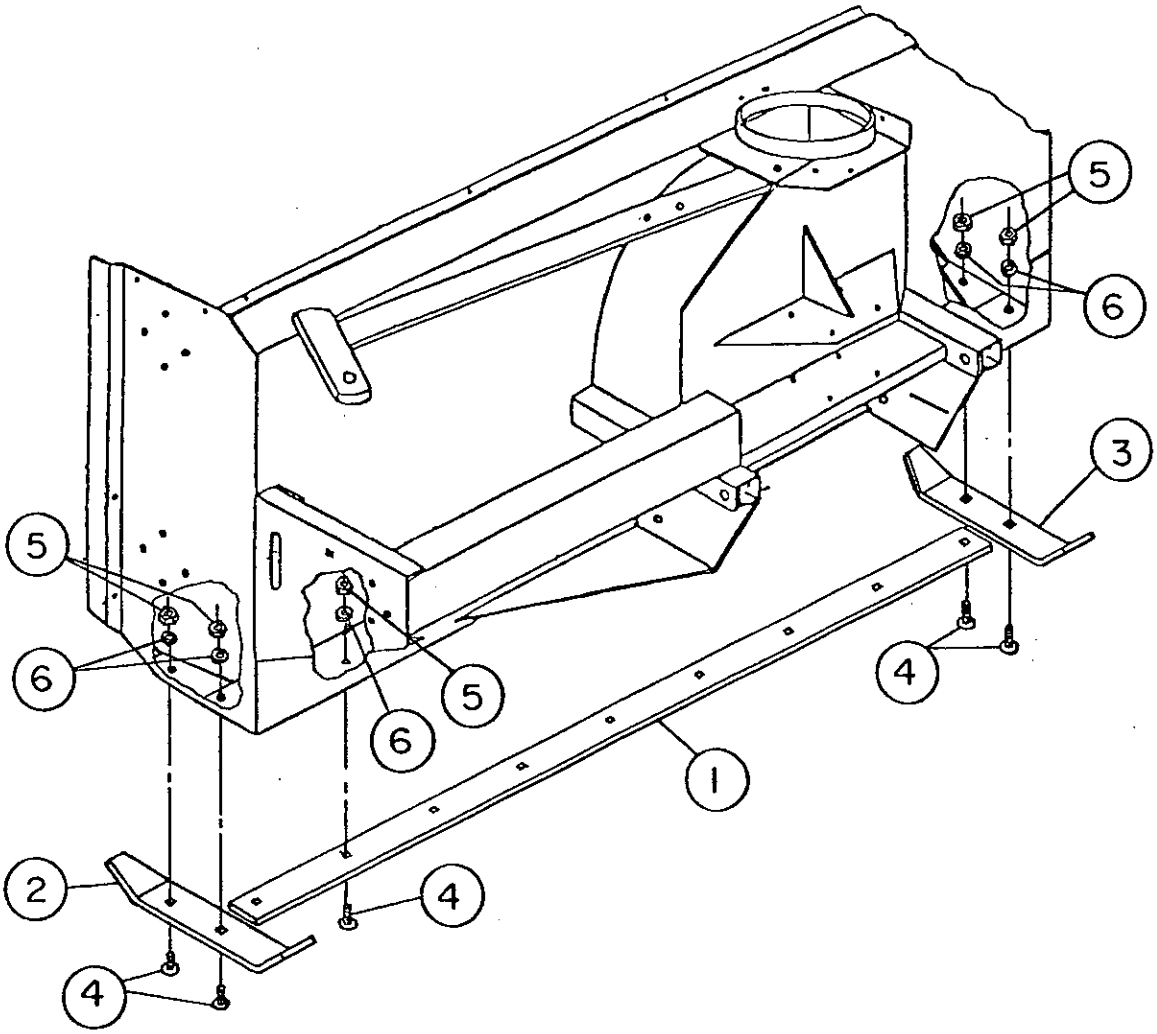

CUTTING EDGE AND SKID SHOES

ITEM	PART #	DESCRIPTION	QTY B96	QTY B108
1	655896	Cutting Edge	1	-
	656324	Cutting Edge	-	1
2	655894	Skid Shoe L.H.	1	1
3	655895	Skid Shoe R.H.	1	1
4	O/L	Bolt (7/16" NC x 1 ½", Plow)	16	17
5	O/L	Nut (7/16" NC, Hex)	16	17
6	O/L	Washer (7/16", Lock)	16	17

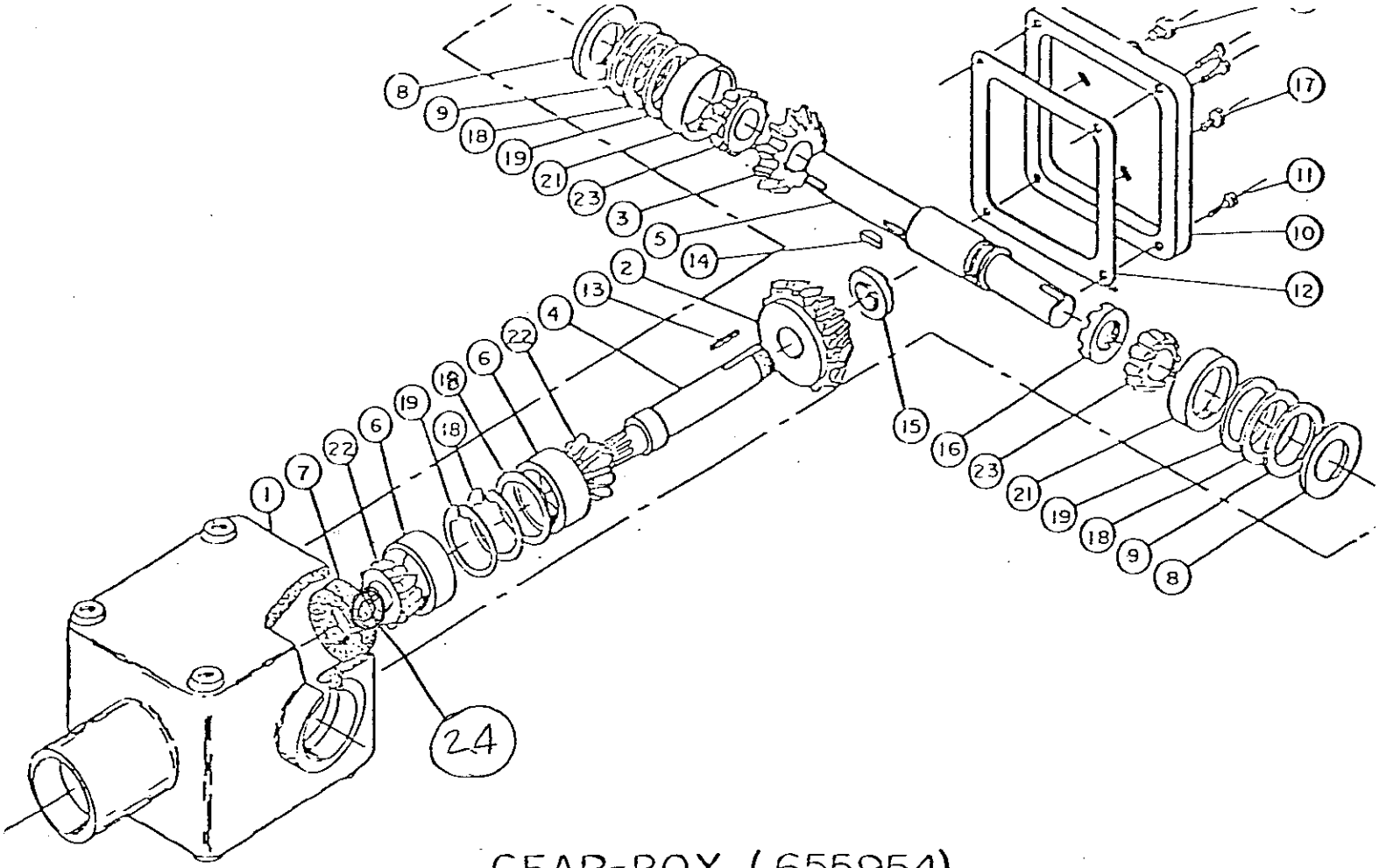

GEAR-BOX (655954)

ITEM	PART #	DESCRIPTION	QUANTITY
1	656332	Base	1
2	65443	Gear (1 3/8" hole)	1
3	65444	Gear (1 ½" hole)	1
4	65445	Shaft (in)	1
5	656333	Shaft (out)	1
6	65448	Cup. no. 14276	2
7	65452	Oil seal 1½", K23	1
8	656334	Oil seal	2
9	656246	Retaining ring.	2
10	656335	Cover	1
11	65457	Bolt (5/16" x 5/8", Hex)	4
12	656336	Gasket	1
13	65461	Key (3/8" x 3/8" x 1 3/8")	1
14	654906	Key (3/8" x 3/8" x 1 3/8" RND, hard)	1
15	65463	Nut (1 3/8")	1
16	656252	Nut (1 3/4")	1
17	65468	Level plug 3/8" NPT	1
18	656247	SHIM	A/R
19	65455	RETAINING RING	2
20	65471	Plug (vent) 1/8" NPT	1
21	656338	Cup. no. 13620	2
22	65447	Bearing cone 14137 A	2
23	656339	Bearing cone 13687	2
24	656299	RETAINING RING	1

CN 6-2-74

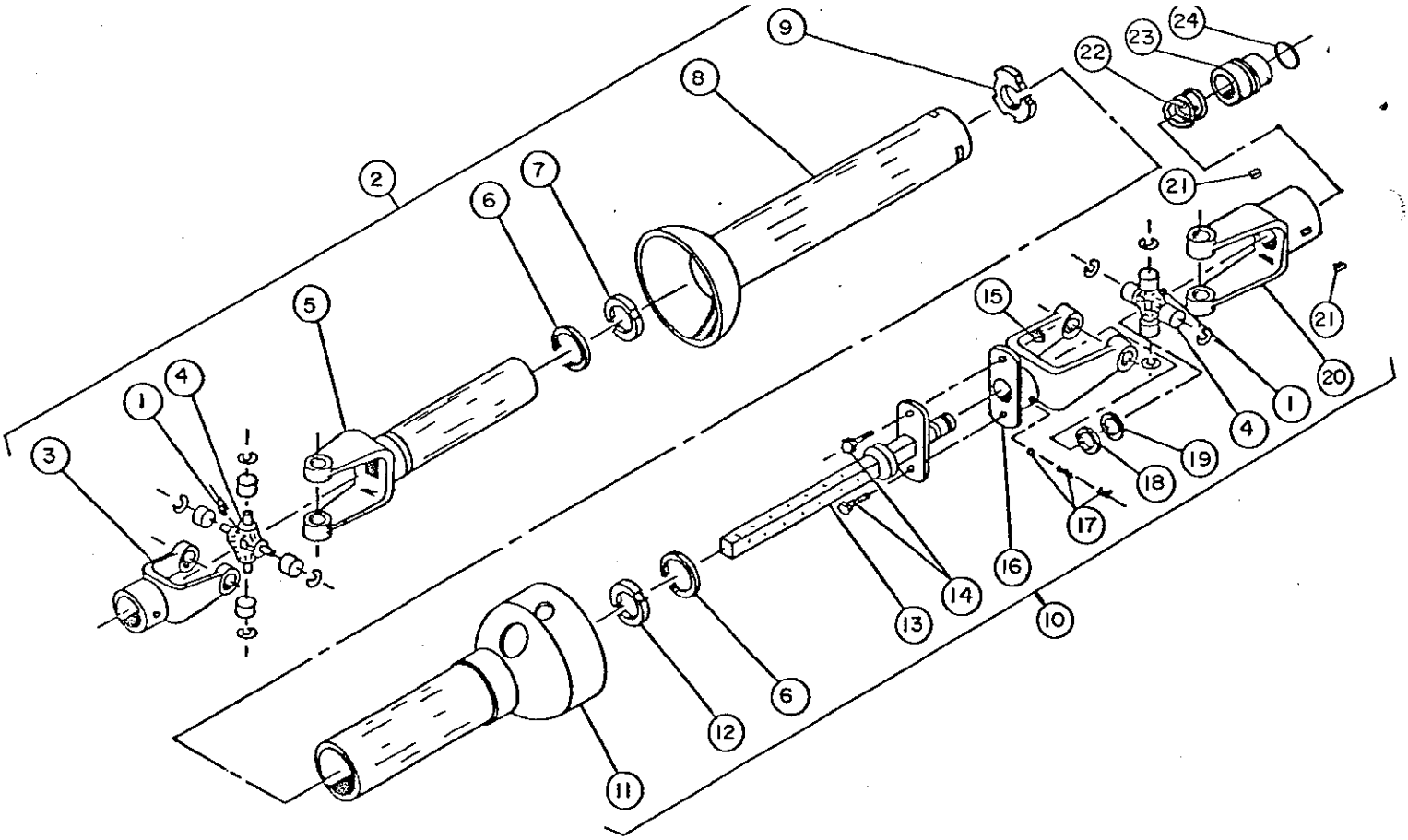

P.T.O. SHAFT (656088)

ITEM	PART #	DESCRIPTION	QTY
1	655349	Grease Fitting	2
2	655508	Joint & Tube	1
3	656089	End Yoke	1
4	655237	Repair Kit	2
5	655510	Yoke and Tube	1
6	655355	Bearing Retainer	2
7	655501	Nylon Bearing	1
8	655511	Male Guard Assembly	1
9	655358	Nylon Centralizer	1
10	655512	Joint & Shaft	1
11	655513	Femal Guard Assembly	1
12	655356	Nylon Bearing	1
13	655514	Shaft & Shear Flange	1
14	O/L	Bolt (5/16" NC x 1½", Hex)	2
15	O/L	Locknut (5/16" NC, Lock)	2
16	655241	Shear Yoke	1
17	655352	Instamatic Lube Kit	1
18	655351	Washer	1
19	655350	Retaining Ring	1
20	655515	Safety Slide Lock Yoke Assembly	1
21	655516	Pawl	2
22	655517	Spring	1
23	655518	Collar	1
24	655519	Retaining Ring	1

GARANTIE

Ber-Vac Inc. certifie à l'acheteur d'origine que l'équipement est exempt de tout défaut de matériel et de fabrication. Selon cette garantie, la responsabilité de Ber-Vac Inc. se limite à la réparation ou au remplacement (F.O.B. notre usine) de toute partie ou pièce jugée défectueuse et ce, dans l'année suivant la date d'achat (sauf indication contraire).

En aucun cas, la Compagnie Ber-Vac ne sera tenue responsable des dommages directs ou indirects, causés ou subis par l'acheteur/usager.

Cette garantie annule toute autre garantie écrite ou tacite et la Compagnie Ber-Vac n'assume aucun engagement ou responsabilité pris en son nom par qui que ce soit lors de la vente des dits produits ou pièces.

Cette garantie ne s'applique pas à un produit (ou des parties) modifié, maltraité, mal utilisé ou endommagé par négligence. Toutes les réclamations pour les pièces ou parties de rechange doivent être déposées chez le distributeur autorisé ou au bureau de la Compagnie.

Toutes les parties non fabriquées par Ber-Vac (telles que moteurs, pneus, etc.) portent la garantie du fabricant d'origine.

Toutes les réclamations doivent être produites en dedans de 30 jours du bris mécanique. La Compagnie se réserve le droit d'exiger les pièces et ce, F.O.B. notre usine ou distributeur.

WARRANTY

Ber-Vac Inc. warrants to the original buyer that the equipment is free from defects in material and workmanship. Ber-Vac's obligation, under this warranty, will be limited to the repair or to the replacement (F.O.B. factory) of any part or component which Ber-Vac shall disclose to be defective within one year from date of original purchase (unless otherwise specified).

In no event shall Ber-Vac be liable for consequential or special damages, direct or indirect, arisen by the buyer/user.

This warranty replaces all other written or implied warranties and Ber-Vac Company neither assumes nor authorizes any other person to assume on its behalf any other obligation nor responsibility in connection with the sale of the said product or components.

This warranty will not apply to the product (or components) which will have been the object of an accident, alteration, abuse or misuse. Any claim for parts or replacement of equipment must be taken up with the authorized dealer or with the office of the Company.

All components not manufactured by Ber-Vac (such as motors, tires, etc.) are covered by the original manufacturer's warranty.

All claims must be taken up within 30 days from date of mechanical breakage. The Company reserves the right to require the said parts and this F.O.B. our factory or distributor.